Fresh Cup

Auto Eject Single Serve POD Brewing system

Freedom of Choice

Choose from up to five programmable recipes (Coffee Mild, Medium, Bold, Espresso and Iced) for brewing your drink just the way you like.

Perfectly Brewed Coffee

Enjoy the benefits of Fresh Cup's unmatched brewing capability. Easily develop your brewing parameters for your POD through the simple programming process of pre-infusion, pulse brewing, volume and contact time. Newco's flow meter provides precise volume accuracy cup after cup. Fresh Cup's new innovative mechanism accommodates the widest selection of PODS and makes brewing simple and intuitive. 61mm and 56mm specific mechs are also available.

Built to last

Fresh Cup was designed with the roaster/operator in mind. High quality, rugged construction that can withstand the rigors of everyday use. New modern design and appearance provides a professional look which blends well in any customer location increasing account placement.

Operator Convenience

Built in features that add value to your operation and the customer experience:

- Accepts standard travel mugs.
- One touch brew activation.
- Back to back brew cycles without reheat delays.
- Easy access spent waste and drip tray with automatic counter reset.
- Quiet ejection of PODs.
- Hot water dispense button for allied products.
- Quiet brewing operation.

Serviceability

Quickly and easily remove the brewing mechanism and heating system from the cabinet for service and repair. In addition, Fresh Cup provides:

- Error codes for "heads up" serviceability
- Replaceable independent Newco parts
- Removable side panels for serviceability.

*NSF Model Available

Proudly made in the USA

NEWCO
newcocoffee.com

800.325.7867 • 3650 New Town Blvd. • St. Charles, MO 63301

Fresh Cup Auto Eject Pod Brewing System

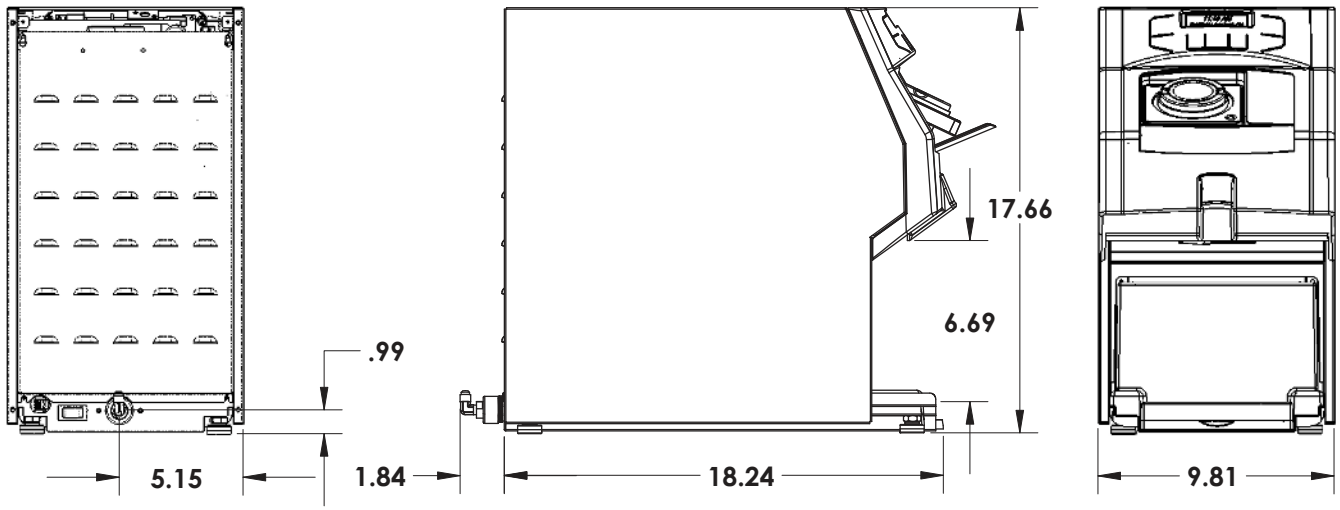

Plug and Play Operation

Simply connect the Fresh Cup to a water and electrical line and the initial setup routine will fill the tank and then safely turn on the heater.

Energy Smart

Choose from three different power modes to conserve energy during periods of non use: power on, power save and power down.

Custom Branding

Fresh Cup's entire front can be custom branded with your image helping you to promote your brand and services.

MODEL	TYPE	Part #	WIDTH	DEPTH	HEIGHT	VOLTS	WATTS	AMPS	WEIGHT
FKP-3	UNIVERSAL POD	780640	9.81″	18.24″	17.66″	120 VOLT	1700W	14.2A	33 LBS
				Canadian Electrical		120 VOLT	1400W	11.6	
FKP-3-S	UNIVERSAL POD NSF	780770	9.81″	18.24″	17.66″	120 VOLT	1700W	14.2A	33 LBS
				Canadian Electrical		120 VOLT	1400W	11.6	